R.O.R. TN Axle (Metric)
With Stepped S Cams Fabricated Brake Spider
16-1/2" X 7" Brakes

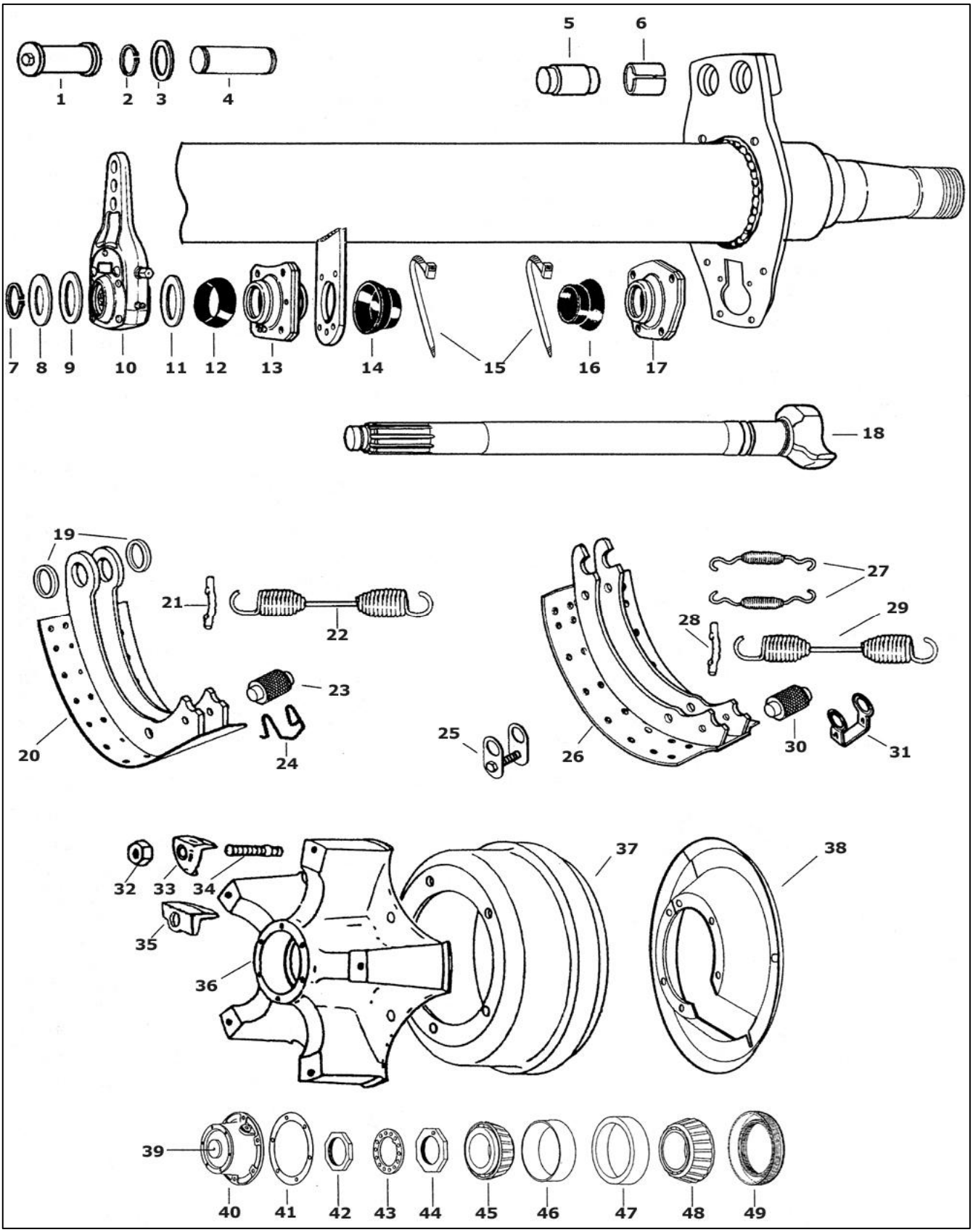

R.O.R TN Axle (Metric)
With Stepped S Cams Fabricated Brake Spider
16-1/2" X 7" Brakes

Item:	Part No:	Description:
1A	FP3200	ANCHOR PIN SHORT 2-1/4"
1B	FP3304	ANCHOR PIN LONG 2-13/16"
2	FP34.1525	CIRCLIP
3	FP35.1580	WASHER
4	FP15.527	ANCHOR PIN STD
5	FP15.542	ANCHOR PIN
6A	FP3207B	ANCHOR PIN BUSH BI METAL
6B	FP16.563	ANCHOR OIN BUSH SS
7	FP34.1525	CIRCLIP
8	FP35.1580	WASHER
9	FP29.1308	WASHER
10	FP5020	SLACK ADJUSTER 1-1/2" X 10 SPLINE
11	FP29.1308	WASHER
12	SEE ITEM 14	CAN USE YK79500686
13	FP30.1358	CAM BUSH ASSY
14	FP9015	SEAL KIT
15	SEE ITEM 14	NOT SERVICED SEPARATELY
16	SEE ITEM 14	NOT SERVICED SEPARATELY
17	A3105V282	OUTER BUSH ASSY
18A	ZWT2035	CAMSHAFT LH 20-1/2" 10 SPLINE
18B	ZWT2036	CAMSHAFT RH 20-1/2" 10 SPLINE
19	FP3302	WASHER
20	FP21.889	BRAKE SHOE
21	FP20.881	PIN RETURN SPRING
22	FP19.853	RETURN SPRING
23	SEE TABLE	CAM ROLLER
24	FP34.1529	RETAINER
25	FP3415	RETAINER KIT
26	FP21.898	BRAKE SHOE
27	FP19.860	RETURN SPRING
28	FP20.881	PIN RETURN SPRING
29	FP19.856	RETURN SPRING
30	SEE TABLE	CAM ROLLER
31	ZWT3402	RETAINER Q
32	FP6002	WHEEL NUT 3/4"
33	FPTF60	WHEEL CLAMP
34	FP6001	WHEEL STUD 3/4"
35	FPTF62	CLAMP MALCO
36A	ZFTST301	GP HUB ASSY
36B	ZTFST315	MALCO HUB ASSY
37	ZTFDM185	BRAKE DRUM
38	FP33.1476A	DUST COVER
39	ZST359-5990	HUB CAP PLUG
40	ZST343-4009	HUB CAP
41	ZST330-3067	HUB CAP GASKET
42	FP12.410	NUT INNER
43	FP12.411	LOCK WASHER
44	FP12.412	NUT AXLE OUTER
45	TMHM212049	OUTER CONE
46	TMHM212011	OUTER CUP
47	TMHM218210	INNER CUP

Item:	Part No:	Description:
48	TMHM218248	INNER CONE
49	SEE TABLE	HUB SEAL
	ITEM 23 & 30	
	FP32.1425	CAM ROLLER SMOOTH STD
	FP32.1426	CAM ROLLER SMOOTH 1/8" OS
	FP32.1427	CAM ROLLER SMOOTH 1/4" OS
	FP32.1428	CAM ROLLER KNURLED STD
	FP32.1428A	CAM ROLLER KNURLED 1/8" OS
	FP32.1428B	CAM ROLLER KNURLED 1/4" OS
	ITEM 49	
	FP755400	BARRIER SEAL
	ZCR46305	CR SEAL
	ZST307-0743	STEMCO SEAL
	CAMSHAFT KITS	
	FP3111	CAMSHAFT WASHER KIT
	FP9015	SEAL KIT
	BRAKE SHOE HARDWARE KIT	
	FP3332	BRAKE KIT SMOOTH ROLLER P TYPE
	FP3332ES	BRAKE KIT SMOOTH ROLLER P TYPE
	FP3332K	BRAKE KIT KNURLED ROLLER P TYPE
	FP3332KES	BRAKE KIT KNURLED ROLLER P TYPE
	FP3333	BRAKE KIT SMOOTH ROLLER Q TYPE
	FP3333HD	BRAKE KIT SMOOTH ROLLER Q TYPE
	FP3333HDK	BRAKE KIT KNURLED ROLLER Q TYPE
	FP3333K	BRAKE KIT KNURLED ROLLER Q TYPE
	FP3333LS	BRAKE KIT SMOOTH ROLLER Q TYPE